360 PANEL SYSTEM

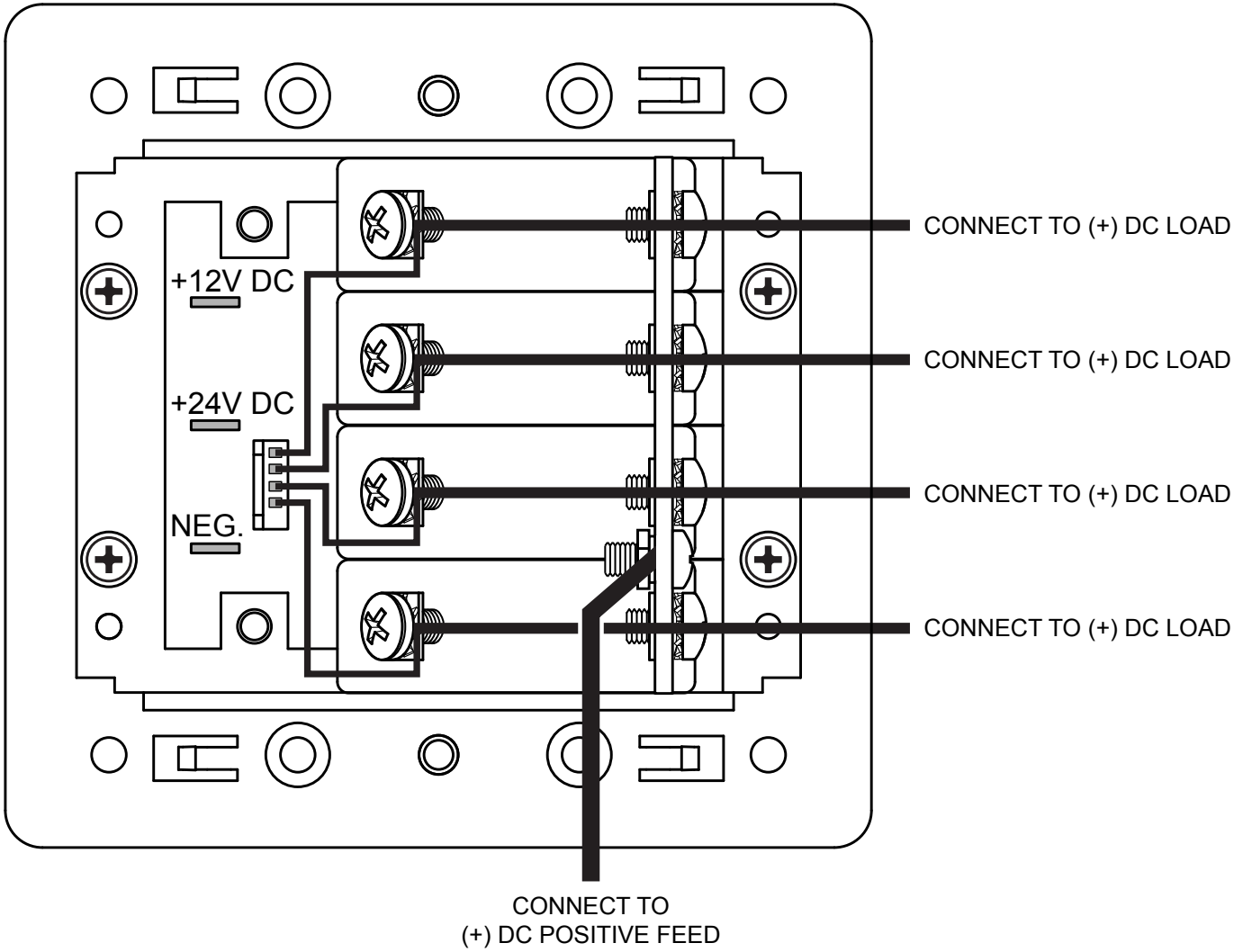

BLUE SEA SYSTEMS
425 Sequoia Drive
Bellingham, WA 98226
Phone: (360)738-8230
Fax: (360)734-4195

Panel Wiring Schematic
DC Power Distribution Panel
1200/1216/1220/1222/1223/1225 (1216 shown for reference)